Safety Pin - VDI

Code: G57

Reference: VDI 3365

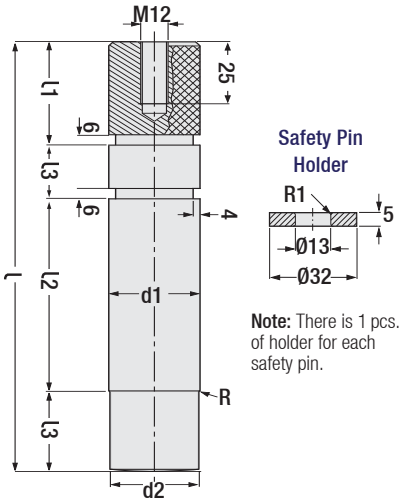

Note: There is 1 pcs. of holder for each safety pin.

Code: G57

d1 e8	d2 +0.05	R	Load Capacity
32	29	4	500 Kg
32	29	4	500 Kg
40	37	5	750 Kg
40	37	5	750 Kg
50	47	6	1250 Kg
50	47	6	1250 Kg
63	60	6	2500 Kg
63	60	6	2500 Kg

d1 e8	l	l1	l2	l3
32	130	22	58	25
32	147	22	75	25
40	171	32	75	32
40	191	32	95	32
50	207	32	95	40
50	232	32	120	40
63	252	32	120	50
63	287	32	155	50

Order: G57. d1 x l

Material: 1.7131

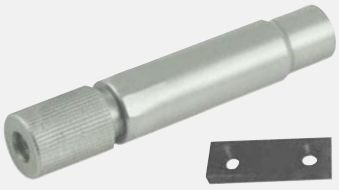

Safety Pin - FCA

Code: G56

Reference: FCA 230.GSG.16

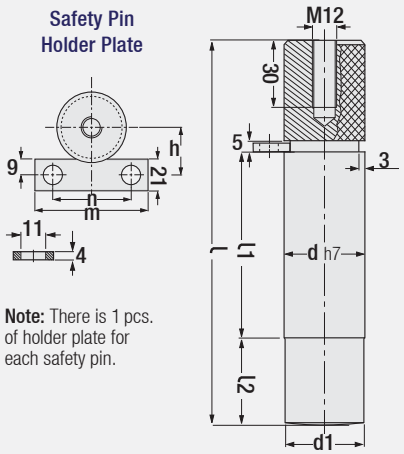

Note: There is 1 pcs. of holder plate for each safety pin.

Code: G56

d	d1	h	m	n
30	29	22	50	35
40	39	27	65	45
50	49	32	70	50

d	l	l1	l2
30	155	87	33
40	193	109	39
50	229	131	43

Order: G56. d

Material: 1.7131

Shock Absorber for Safety Pin

Code: G56.1

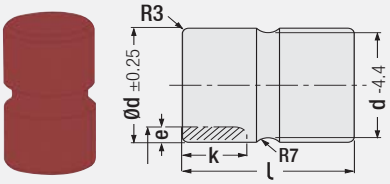

Pin Diameter	d	l	e	k	Max. Press
40	50	70	8	25	%16
50	63	80	8	30	%12

Order: G56.1 x d

Material: Polyurethane 90 Shore

Code: G57.2

Shock Absorber for Safety Pin

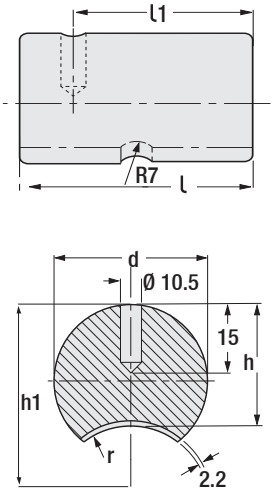

Code: G57.2

d ± 0.25	h	h1	r
40	32	50	18
50	40	63	23
63	51	86	35

d ± 0.25	l	l1
40	60	45
50	80	60
63	80	60

* It should be used with safety pins. G57.2 product is compatible with the product code G57.
* It is an impact and speed retarder product.
* Hardness of polyurethane material is 90 shore.
* All dimensions without tolerance are in EN 22 768-1 mm standards.

Order: G57.2 x d

Material: Polyurethane 90 Shore